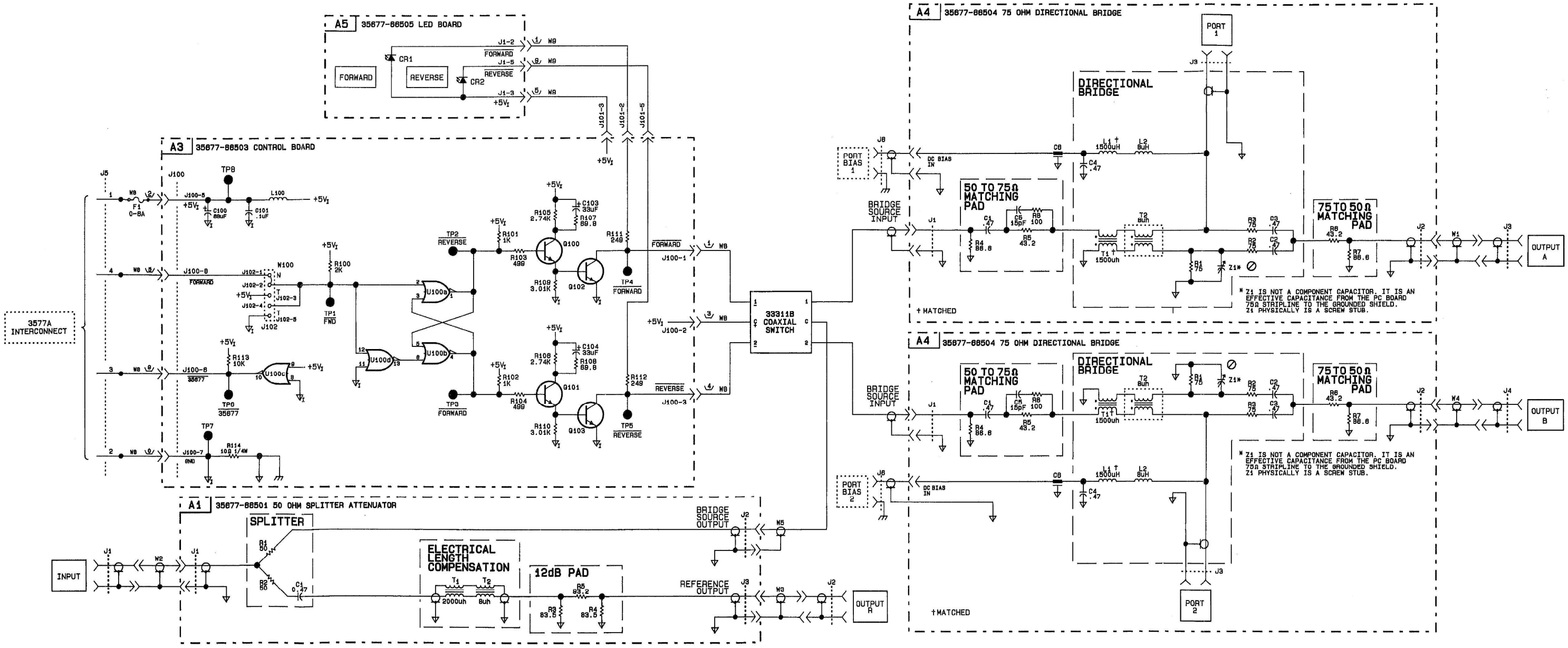

35677B Schematic 7-17/7-18